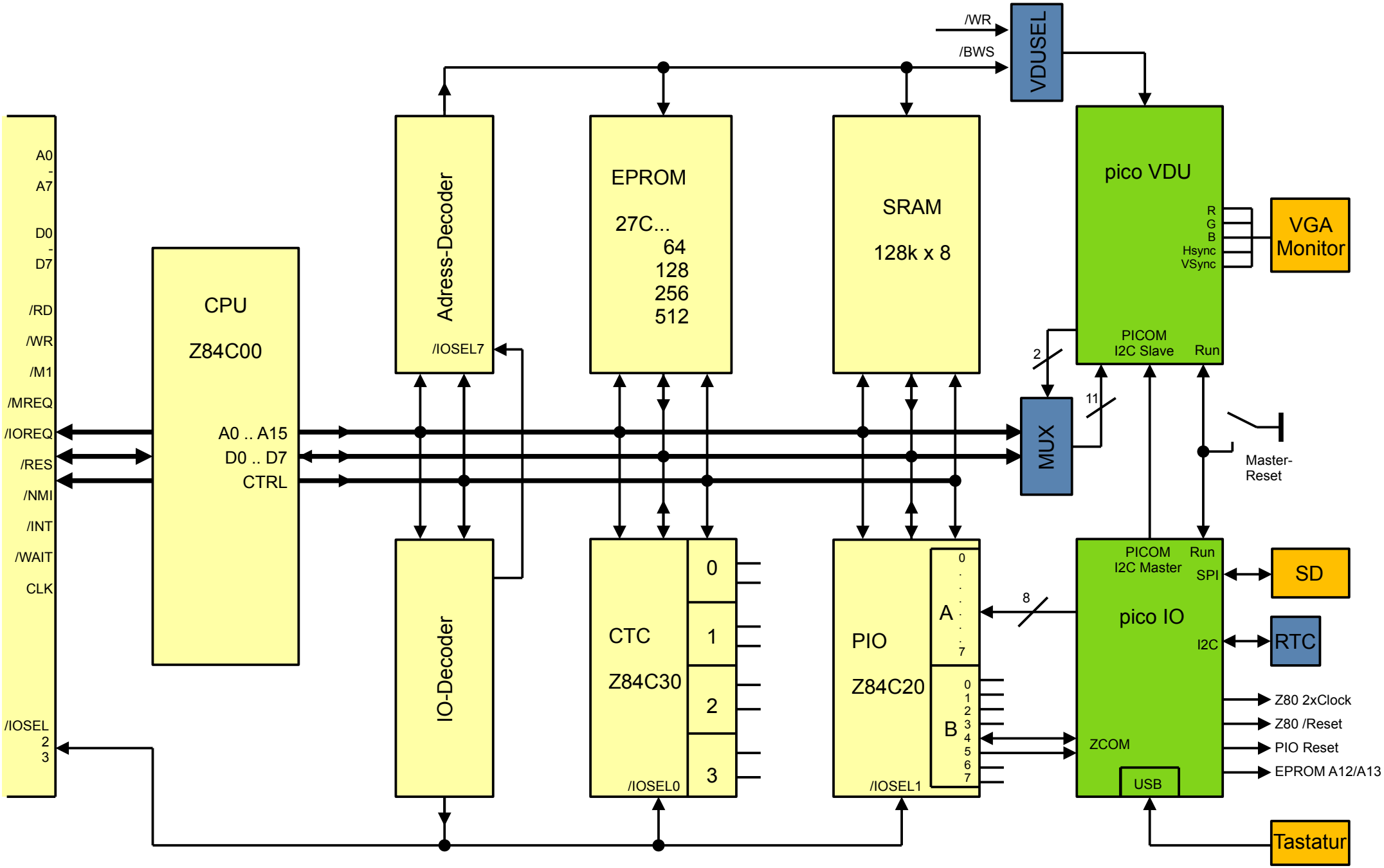
/WR
/BWS
VDUSEL
A0
-
A7
D0
-
D7
/RD
/WR
/M1
/MREQ
/IOREQ
/RES
/NMI
/INT
/WAIT
CLK
/IOSEL
2
3
CPU
Z84C00
A0 .. A15
D0 .. D7
CTRL
Adress-Decoder
/IOSEL7
EPROM
27C...
64
128
256
512
SRAM
128k x 8
pico VDU
R
G
B
Hsync
VSync
VGA
Monitor
PICOM
I2C Slave
Run
2
11
MUX
Master-
Reset
IO-Decoder
CTC
Z84C30
0
1
2
3
/IOSEL0
PIO
Z84C20
A
0
7
B
0
1
2
3
4
5
6
7
/IOSEL1
8
PICOM
I2C Master
Run
SPI
SD
pico IO
I2C
RTC
Z80 2xClock
Z80 /Reset
PIO Reset
EPROM A12/A13
ZCOM
USB
Tastatur